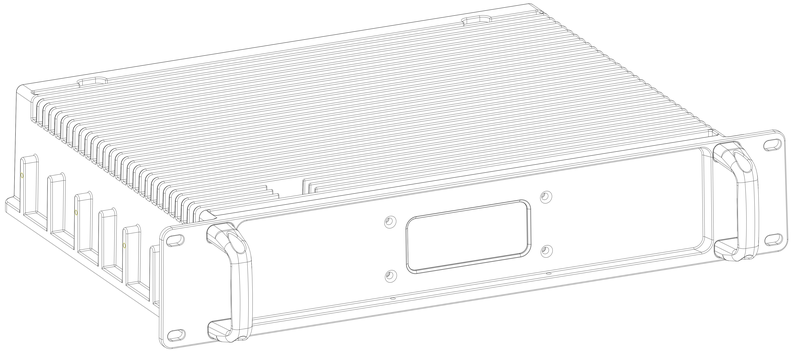

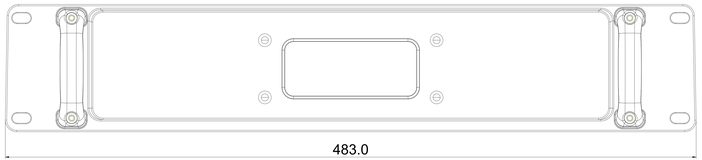
483.0

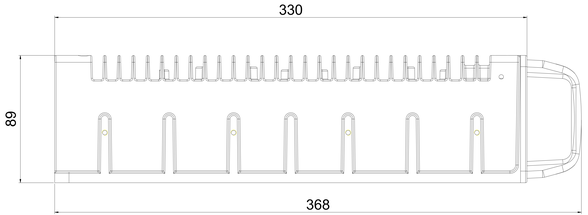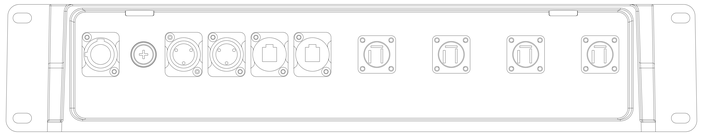
330
89
368