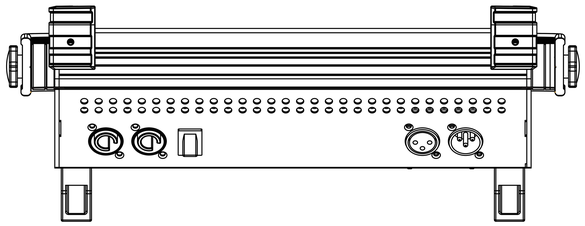

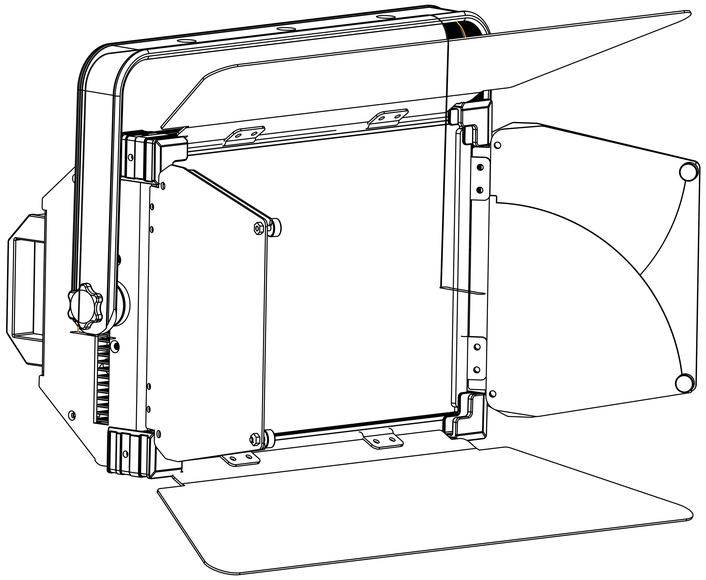

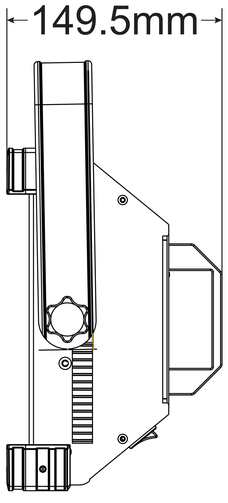
149.5mm

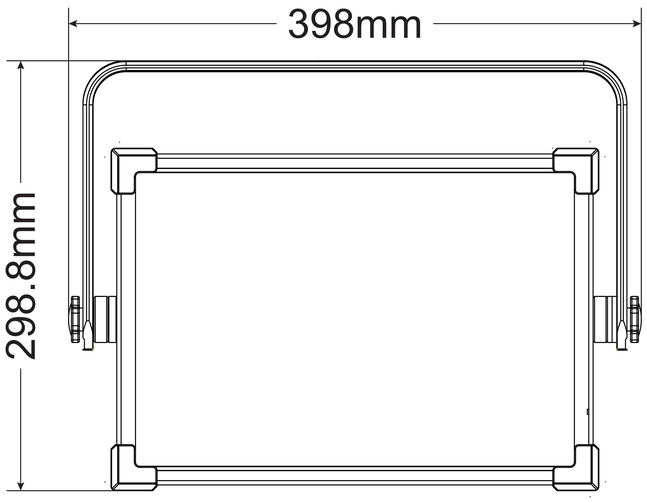
398mm
298.8mm

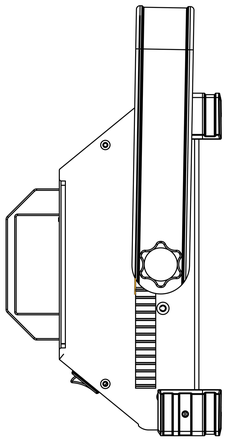

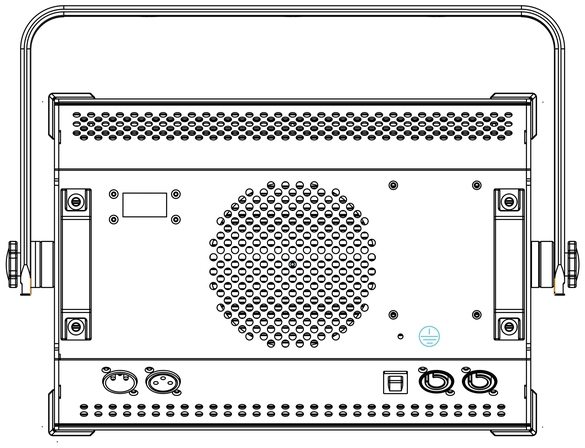

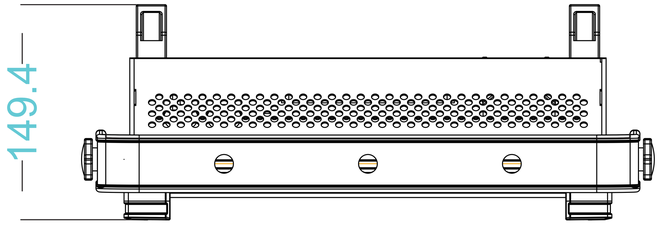
149.4