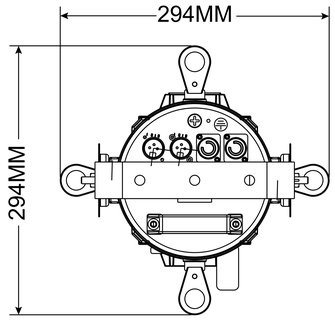
294MM
294MM

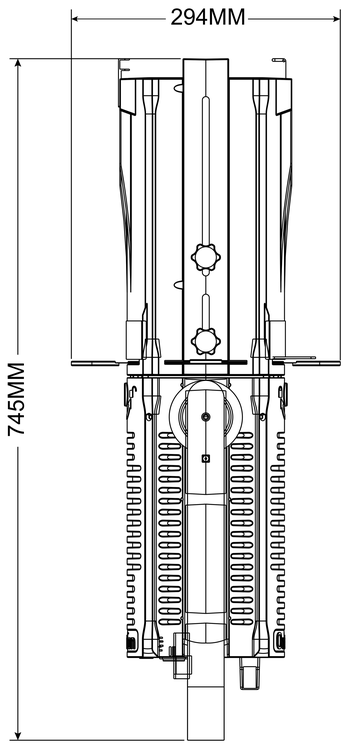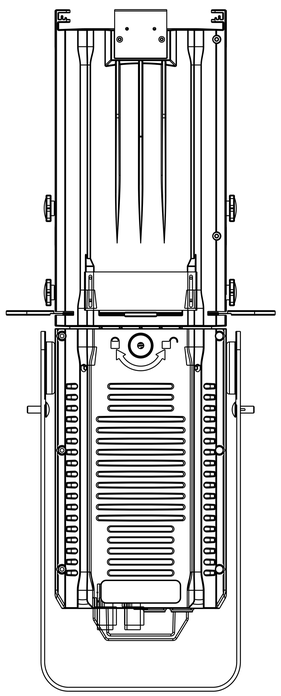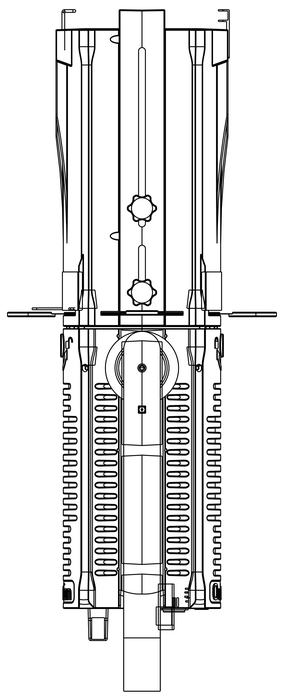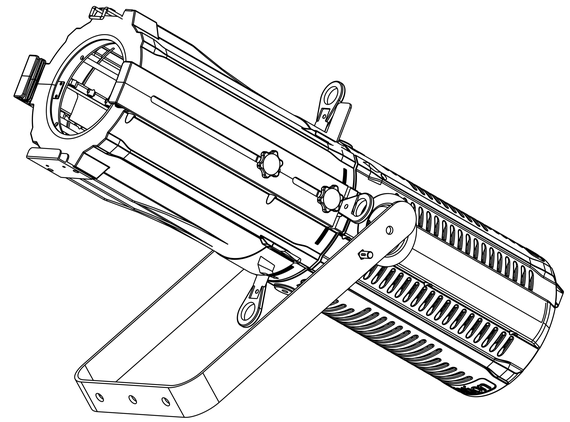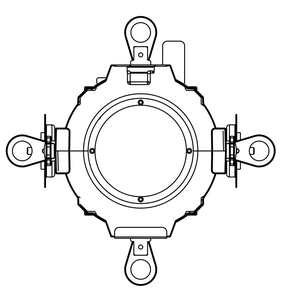
294MM
745MM