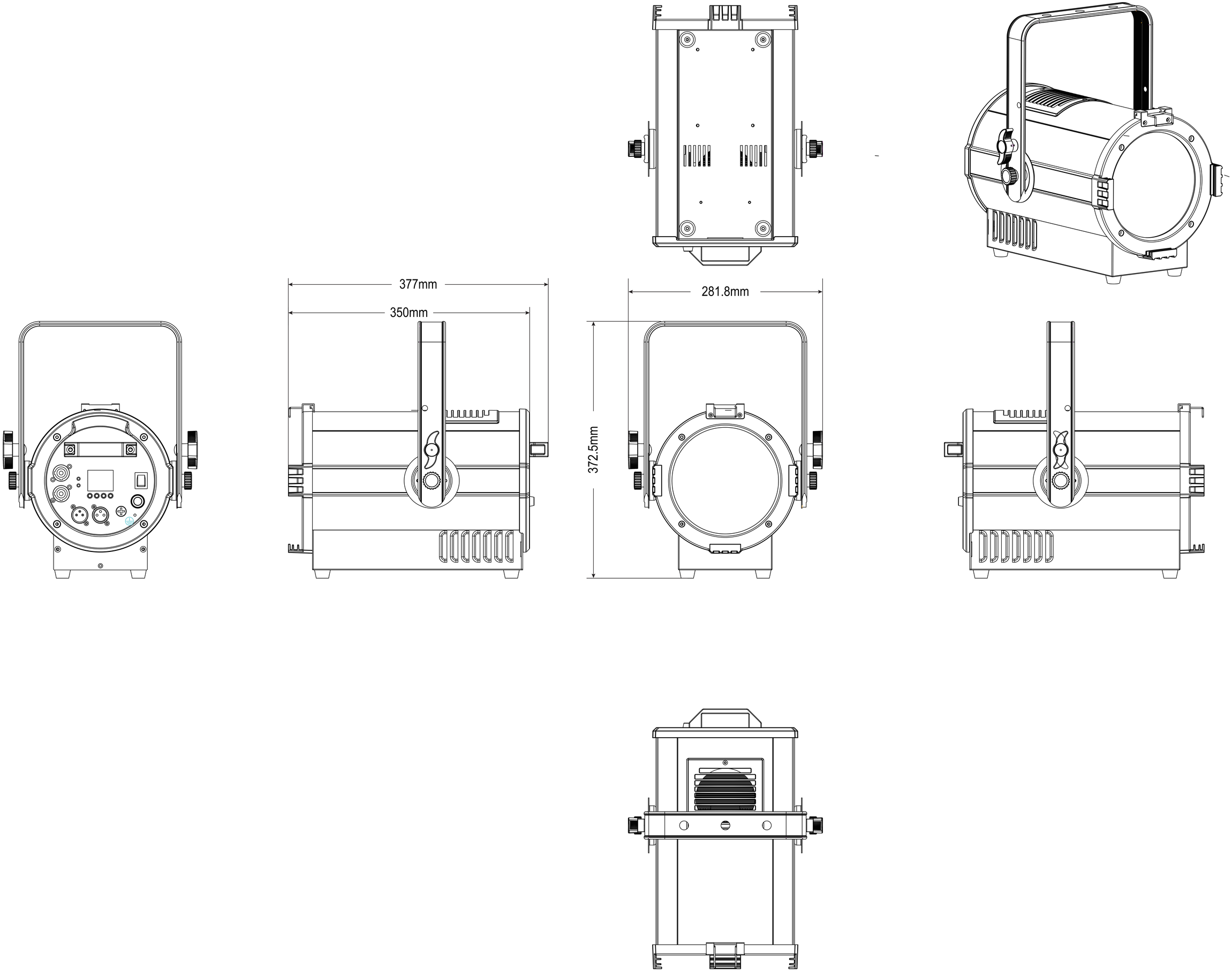
377mm
350mm
281.8mm
372.5mm