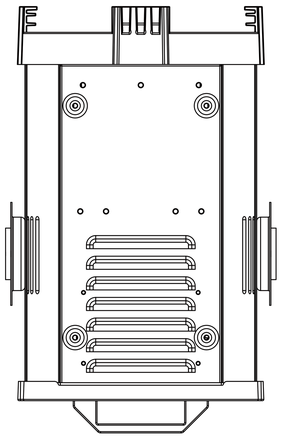

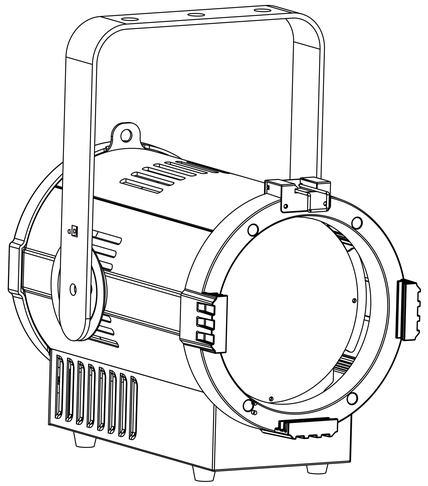

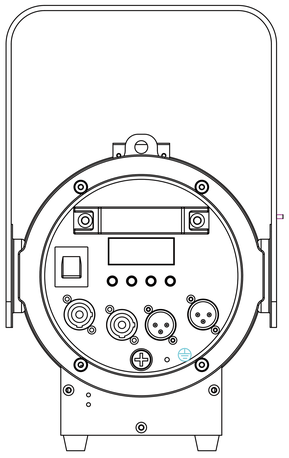

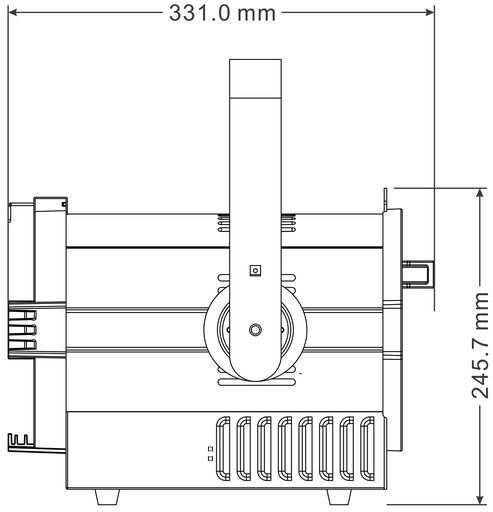
331.0 mm
245.7 mm

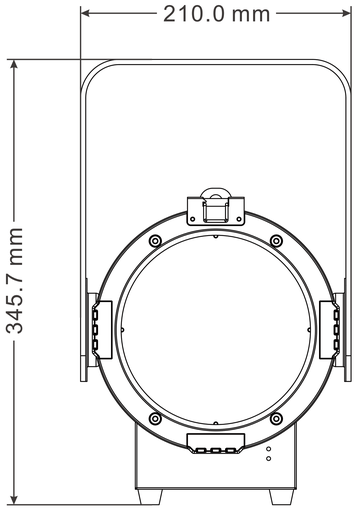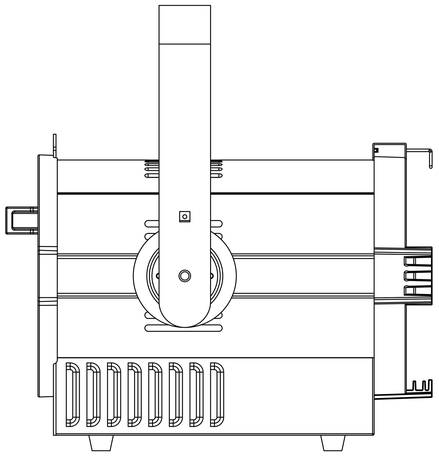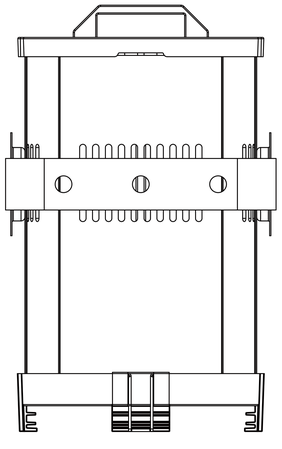
210.0 mm
345.7 mm